Accessoires (Mounting Clamps)

ZBSK 0180

ZBSK 0180 (18,0 ⌀)

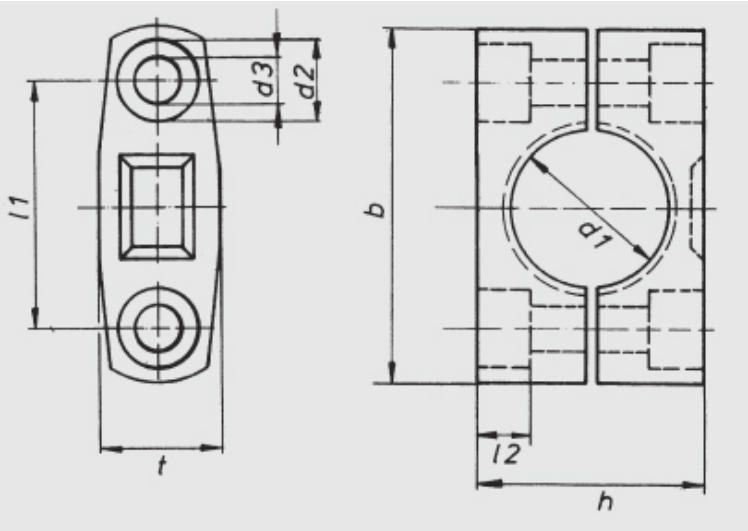

Distance L1:	32,0 mm
Distance L2:	7,5 mm
Width:	45,0 mm
Diameter d1:	18,0 mm
Diameter d2:	10,0 mm
Diameter d3:	6,0 mm
Height:	31,0 mm
Depth:	16,0 mm
Material:	plastic PPN 1060 black

Further information about this product can be found on our website, please visit:
https://schoenbuch-sensor.de/en/products/zbsk-0065_en/zbsk-0180_en/