Reflective Types (Glass Fibre)

LREC 0250

LREC 0250 (250 mm)

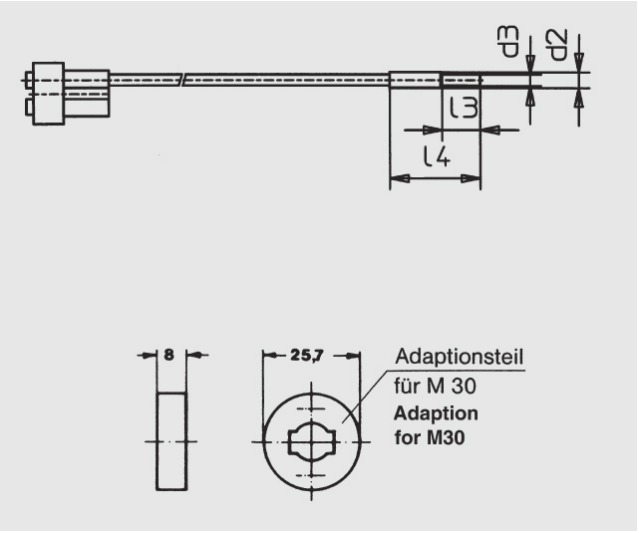

Glass slice pane:	2 x 3 mm2
Length:	250 mm
Sn M18/M30:	-/150 mm
Coating:	ALS

Further information about this product can be found on our website, please visit:
https://schoenbuch-sensor.de/en/products/lrec-0250_en/