Through Beam Lightbarriers (Glass Fibre)

LLDA 0500

LLDA 0500 (500 mm)

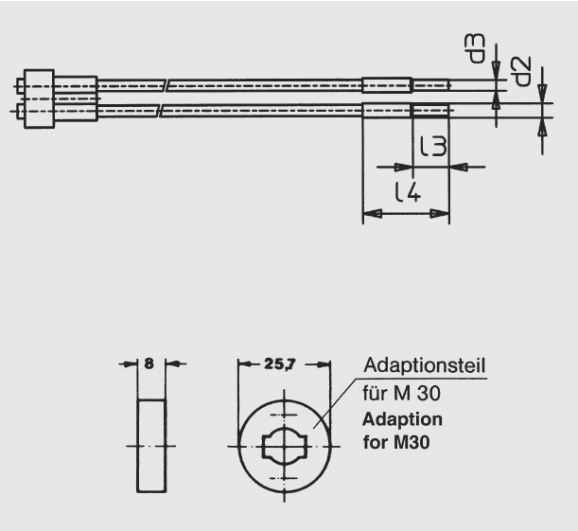

Glass slice pane:	2 mm2
Length:	500 mm
Sn M18/M30:	150/200 mm
Coating:	PVC

Further information about this product can be found on our website, please visit:
https://schoenbuch-sensor.de/en/products/llda-0250_en/llda-0500_en/