Inductive Proximity Sensors (DC Rectangular Sizes)

IBRD6015

R60 (PNP NC)

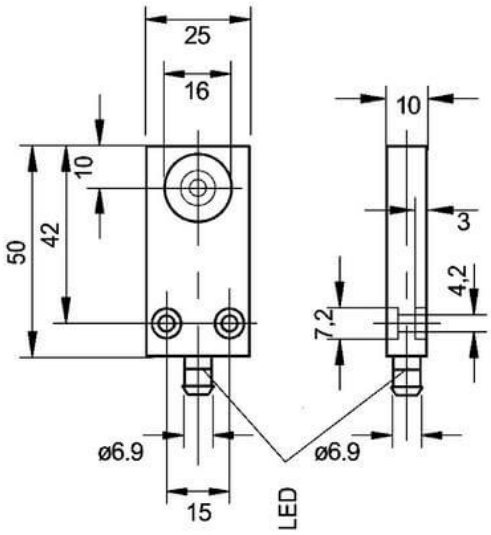

Connection:	plug M8, 3-pin
Connection type:	plug M8
Outlet:	PNP NC
Design:	R60 (10x25x50)
Width:	25 mm
Installation type:	flush
Height:	10 mm
Short protection:	yes
Length:	50 mm
LED:	yes
No-load current:	10 mA
Nominal voltage:	24 VDC
Reproducibility:	1 %
Switching distance:	5 mm
Switching frequency:	800 Hz
Switching hysteresis:	15 %
Protection class:	IP 67
Voltage drop:	2,5 V
Voltage type:	VDC
Voltage range:	10 - 35 V
Ampacity:	300 mA
Temperature drift:	10 °C
Environment temperature:	-25 bis 70 °C
Material:	plastic

Further information about this product can be found on our website, please visit:
https://schoenbuch-sensor.de/en/products/ibrd6014_en/ibrd6015_en/