Capacitive Proximity Sensors (DC)

CFCK3814

38 (PNP NO)

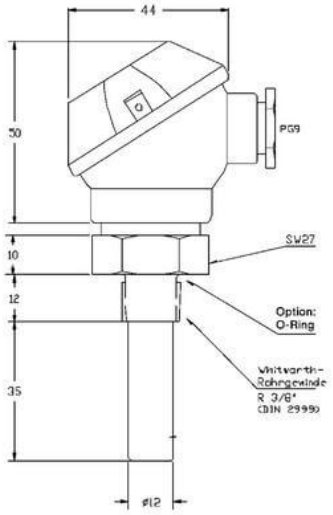

Connection:	klemmbar
Connection type:	clamped
Outlet:	PNP NO
Design:	38 - R 3/8Ó
Diameter:	R3/8
Installation type:	non flush
Short protection:	yes
Length:	107 mm
LED:	* yes (-30 °C... +100 °C)
No-load current:	10 mA
Nominal voltage:	24 VDC
Reproducibility:	abhängig v. Medium
Switching frequency:	5 Hz
Switching hysteresis:	abhängig v. Medium
Protection class:	Klemmraum IP 67/Sonde IP 68 - 10 bar
Voltage drop:	3 V
Voltage type:	VDC
Voltage range:	10 - 35 V
Ampacity:	100 mA
Temperature drift:	abhängig v. Medium
Environment temperature:	-30 bis 125 °C
Material:	steel

Further information about this product can be found on our website, please visit:
https://schoenbuch-sensor.de/en/products/cfck3814_en/